TRACK LED LIGHT

ARTEMIS

A 1.2in-aperture cylinder track head whose beam adjusts from 20° to 50°, so one fixture adapts to each display. ARTEMIS delivers 15W at 90 CRI with a horizontal driver enclosure, four CCTs, black, white or silver finishes and Juno, Global, Halo and Lightolier adapters.

Art Gallery · Show Room · Retail Store · Hospitality

Project Information

Type: Date:

Project:

Catalog #:

Notes:

Key Specifications

Electrical

Input voltage	**120V**
Power factor	**> 0.9**
THD	**< 20%**
Dimming	**TRIAC · ELV**
Power	**15W**

Optical

Efficacy	**~69lm/W**
CRI	**90**
CCT	**2700K · 3000K · 3500K · 4000K**
Distribution	**Adjustable 20° to 50°**

Physical

Aperture	**1.2in**
Mounting	**Track system · Monopoint**
Adapter	**Juno · Global · Halo · Lightolier**
Finish	**Black · White · Silver**
Ambient	**–10°C to 35°C**
Accessories	**Track · Adapters · Sensor**

Certifications

Listings	**5-Yr Warranty · ETL · RoHS**
Lumen maintenance	**L70 at 50000h**

System Warranty

5 years

Eralux will warrant defective drivers, LEDs and boards for 5 years from the date of purchase. This warranty is valid only if the fixture is installed and used as per installation guides and specifications. If a defect is present, Eralux will send drivers and boards at no fee with thorough replacement instructions along with instructions on the return of the defective parts back to Eralux.

Lumen Maintenance

L70 at 50000h

Rated for 70% initial lumen output at 50000h of operation, operated at 25°C ambient temperature; per guidelines published by the Illuminating Engineering Society (IES).

© ERALUX Inc. All rights reserved. Information is subject to change without notice. All values are typical values measured under normal laboratory conditions.

Ordering Guide - Fixture

Assembled Catalog Number

RESET

AE-TL-AT

01 FIXTURE FAMILY

AE-TL-AT
Artemis

AE-TL-AT
ERALUX Artemis track head

02 INPUT VOLTAGE

120
V

12
120V

03 DISTRIBUTION

20°–50°
Adjustable

VA
Variable 20° to 50°

04 CRI

90
CRI

P
Premium 90 CRI

05 CCT

27	30	35	40
2700K	3000K	3500K	4000K

06 ADAPTER

J1	G1	H1	L1
Juno [1]	Global	Halo [1]	Lightolier

07 FINISH

BK	WH	SV
Black powder coat	White powder coat	Silver powder coat

1. Juno and Halo adapters are compatible with 120V only. Mounting adapters, track and track components are ordered from page 03.

© ERALUX Inc. All rights reserved. Information is subject to change without notice. All values are typical values measured under normal laboratory conditions.

Accessory Ordering Guide

Mounting Adapter

RESET

01 MOUNTING

T10016
Monopoint adapter

T10017
Duopoint adapter

Surface / wall mount

Compatible with Juno system. T10016: 1 track head can be installed.
T10017: 2 track heads can be installed.

02 FINISH

-BLK
Black

-WHT
White

-SLV
Silver

Track System

RESET

01 TRACK SYSTEM

T1
Juno system-1 circuit

T2
Juno system-2 circuit

H1
Halo system-1 circuit

ERALUX Track

Track system and components are ordered with the track head if needed.

02 COMPONENT

-2
2ft track

-4
4ft track

-6
6ft track

-8
8ft track

-12
12ft track

0001
Mini connector

0002
T connector

0003
L connector

0004
X connector

0015
Top access end feed

03 FINISH

-BLK
Black finish

-WHT
White finish

-SLV
Silver finish

Track details: eralux.com/product/juno-track-t1 · juno-track-t2 · halo-track-h1.

© ERALUX Inc. All rights reserved. Information is subject to change without notice. All values are typical values measured under normal laboratory conditions.

Dimensions

All dimensions in inches.

AE-TL-AT12VA

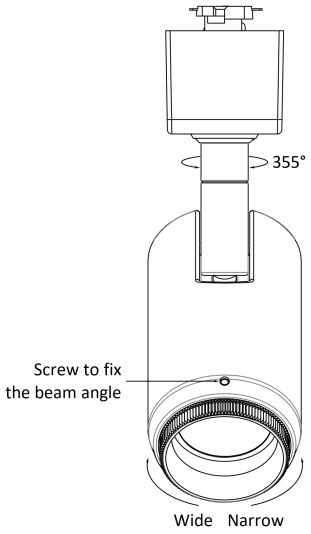

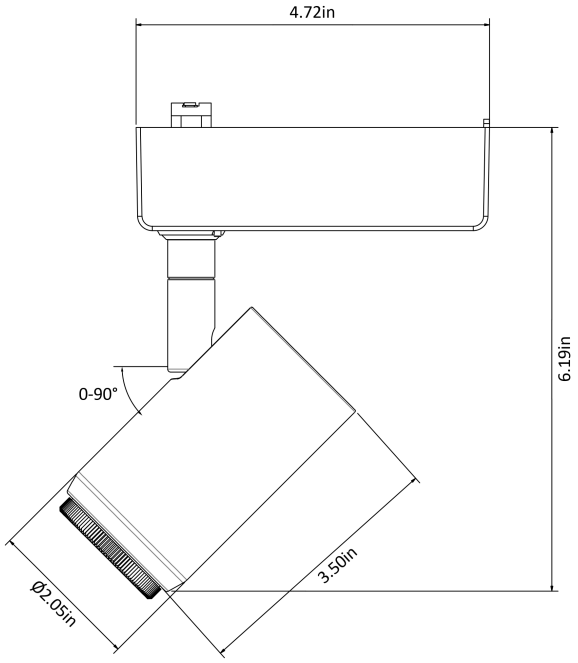

Front

Rotation up to 355˚ · Wide / Narrow beam adjustment

Side

Tilt +/- 90˚ · 6.19in overall height · head 2.05in dia. × 3.50in long

Features

Innovative Design

• Die cast aluminum housing for better heat dissipation.
• Improved design extends LED and driver lifespan.

Multiple Options

• Four CCTs available to choose from.
• Black, white, and silver finishes.
• Adjustable beam angle ranging from 20˚ to 50˚.

Mountings Available

• Choose from any of the popular track systems such as Juno, Halo, Lightolier, or Global.
• Surface mount with either monopoint or duopoint adapters.

Installation: Install Instruction link

© ERALUX Inc. All rights reserved. Information is subject to change without notice. All values are typical values measured under normal laboratory conditions.

Accessories

Mounting Adapters

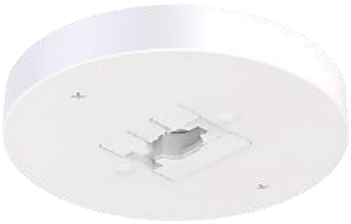

T10016

Monopoint adapter

Surface / wall mount. Compatible with Juno system. 1 track head can be installed.

T10017

Duopoint adapter

Surface / wall mount. Compatible with Juno system. 2 track heads can be installed.

Installed

On a monopoint adapter

© ERALUX Inc. All rights reserved. Information is subject to change without notice. All values are typical values measured under normal laboratory conditions.

Photometric Data

Lumen Estimate Adjustment Factors

2700K	**× 0.93**	3000K	**× 1**	3500K/4000K	**× 1.06**

Factors for 90 CRI. Lumen output varies based on CCT and CRI; multiply by the factor for the CCT ordered.

AE-TL-AT12VA11P30XXXX (SPOT)

20° NARROW

Wattage	**15.3W**
CCT	**3000K**
Distribution	**23°**

ZONE	LUMENS	% FIXTURE
0-20°	**661.23**	**74.54**
0-30°	**778.27**	**87.73**
0-40°	**820.12**	**92.45**
0-60°	**848.36**	**95.63**
0-80°	**860.75**	**97.03**
0-90°	**864.69**	**97.47**

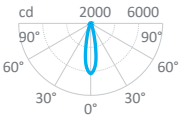

DISTANCE	CENTER Fc	BEAM WIDTH	
1.7ft	**1448**	**0.7ft**	**0.7ft**
3.3ft	**384**	**1.3ft**	**1.3ft**
5.0ft	**167**	**2.0ft**	**2.0ft**
6.7ft	**93.2**	**2.7ft**	**2.7ft**
8.3ft	**60.7**	**3.3ft**	**3.4ft**
10.0ft	**41.8**	**4.0ft**	**4.1ft**
Vert. spread			**22.7°**
Horiz. spread			**22.9°**

AE-TL-AT12VA11P30XXXX (FLOOD)

50° WIDE

Wattage	**15.2W**
CCT	**3000K**
Distribution	**46°**

ZONE	LUMENS	% FIXTURE
0-20°	**439.09**	**43.56**
0-30°	**722.41**	**71.66**
0-40°	**893.08**	**88.59**
0-60°	**966.74**	**95.90**
0-80°	**980.93**	**97.31**
0-90°	**985.53**	**97.76**

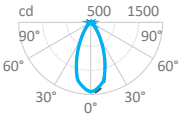

DISTANCE	CENTER Fc	BEAM WIDTH	
1.7ft	**500**	**1.4ft**	**1.4ft**
3.3ft	**133**	**2.8ft**	**2.8ft**
5.0ft	**57.8**	**4.2ft**	**4.2ft**
6.7ft	**32.2**	**5.6ft**	**5.6ft**
8.3ft	**21.0**	**7.0ft**	**7.0ft**
10.0ft	**14.4**	**8.4ft**	**8.4ft**
Vert. spread			**45.6°**
Horiz. spread			**45.7°**

© ERALUX Inc. All rights reserved. Information is subject to change without notice. All values are typical values measured under normal laboratory conditions.

Sensor & Dimming

Non-Bluetooth Sensors set up by IR remote

Product	Detection type	Detection range	Set-up	Dimming protocol	Installation
Detecta AE-CT-DT806	PIR Microphonics	9.8–32.75ft	IR remote	On/Off	Ceiling · no power pack
Remote control RC102					

Please refer to spec sheet for exact specifications for all items above.

Dimmer List

Dimmer Compatibility — TRIAC / ELV

Leviton	**6602-X · 6681-X · 6683-X · 6684-X · 700-X · 705-X · 6633 · 6674 · IPI06-1LZ**
Lutron	**SLV-600X · S2-LX · GL-600H · NFTU-5A · DVLV-600P**
Cooper	**9530XXX**
Lightolier	**MP600X**
Advance	**SR150LED120**

Compatibility verified by Eralux at time of publication. For dimmers not listed, contact the factory.

© ERALUX Inc. All rights reserved. Information is subject to change without notice. All values are typical values measured under normal laboratory conditions.