OUTDOOR LED LIGHT

LOKI 2 DARK SKY

A DarkSky-listed member of the Loki family, built on a stable three-arm design to add security and style to gardens, parking lots and parks. Switchable CCT and power, up to 134lm/W, T2, T3 or T5 optics and tool-less maintenance.

Landscapes · Parking · Park · Walkway · Garden

DarkSky Approved Commercial Luminaire

Project Information

Type: Date:

Project:

Catalog #:

Notes:

Key Specifications

Electrical

Input voltage	**120-277/347V**
Power factor	**>0.9**
THD	**<20%**
Dimming	**0-10V dimming**
Power	**100/80/60W · 13400/10720/8040lm**

Optical

CRI	**80 CRI**
CCT	**30K · 40K · 50K**
Efficacy	**~134lm/W**
Distribution	**T2 · T3 · T5**
Glass cover	**Clear · Frosted**

Physical

Mounting	**Pole mount**
Finish	**Black · White · Silver**
Ambient	**-40˚C to 50˚C**
Protection	**IP65 · IK08 · 20KV surge**
Controls	**Motion sensor · Photocell · EMBB**
EPA	**1.62ft²**

Certifications

Listings	**ETL · RoHS · DarkSky**

System Warranty

5 years

Eralux will warrant defective drivers, LEDs and boards for 5 years from the date of purchase. This warranty is valid only if the fixture is installed and used as per installation guides and specifications. If a defect is present, Eralux will send drivers and boards at no fee with thorough replacement instructions along with instructions on the return of the defective parts back to Eralux.

Lumen Maintenance

L80 at 50000h

Rated for 80% initial lumen output at 50000h of operation, operated at 25°C ambient temperature; per guidelines published by the Illuminating Engineering Society (IES).

© ERALUX Inc. All rights reserved. Information is subject to change without notice. All values are typical values measured under normal laboratory conditions.

Ordering Guide - Fixture

Assembled Catalog Number

RESET

OD-LK-CA

Catalog #:

01 FIXTURE FAMILY

OD-LK-CA

OD-LK-CA

ERALUX LOKI 2 post light · 120-277/347V

02 POWER

-100

100/80/60W
13400/10720/8040lm

03 CRI & CCT

-8TCP-30K

80 CRI 30K
DarkSky (1)

-8TCP

80 CRI 30/40/50K
selectable

04 CONTROL

D

0-10V DIM

MS

Motion sensor

P

Photocell

05 LENS

Blank

Clear (2)

-FR

Frosted

06 FINISH

-BK

Black

-WH

White

-SV

Silver

07 DISTRIBUTION

-T2

Type 2

-T3

Type 3

-T5

Type 5

1. For DarkSky compliance the CCT is fixed at 3000K at the factory. 2. Only T5 with clear glass is DLC Premium.

© ERALUX Inc. All rights reserved. Information is subject to change without notice. All values are typical values measured under normal laboratory conditions.

Dimensions

OD-LK-CA-100-8-TCP

Side View

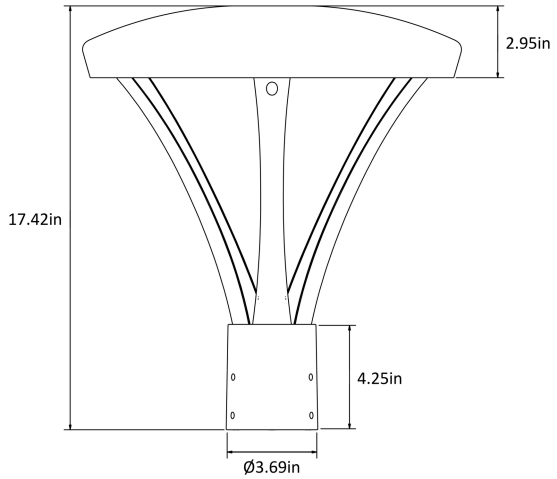

Top View

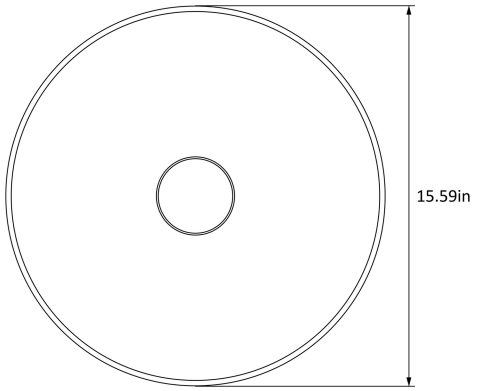

Isometric View

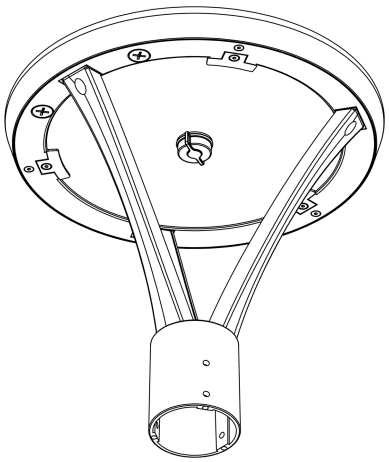

Pole Adapter

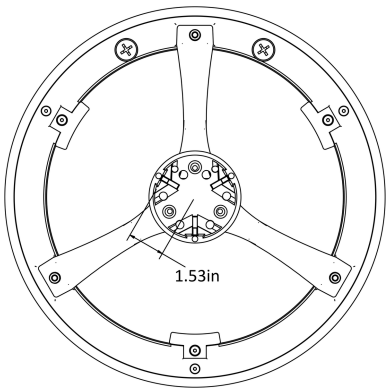

Maximum pole diameter allowed is 3in · EPA rating 1.62ft². All dimensions in inches. Install Instruction link

DarkSky Approved

The fixture must be at 3000K CCT; contact the factory to fix the CCT at 30K.

DarkSky features:
restrict the amount of upward-directed light · reduce glare · reduce light pollution.

© ERALUX Inc. All rights reserved. Information is subject to change without notice. All values are typical values measured under normal laboratory conditions.

Controls

Motion Sensor / Photocell

Motion sensor: plug in microwave motion sensor · IP65 · detects both motion and natural light · remote control is ordered separately.

Photocell: plug in photocell · IP65 · detects only natural light.

Microwave Motion Sensor

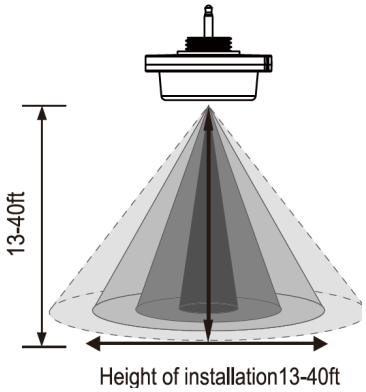

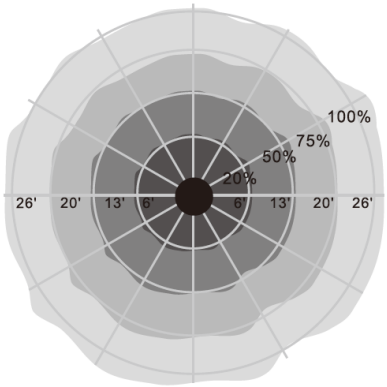

Detection area

IP RATING	**IP65**
DETECTION RADIUS	**20%/50%/75%/100% (3.28-26.25ft)**
MOUNTING HEIGHT	**Max 40ft**
LIGHT - CONTROL	**24H/10lux/30lux/50lux**
TEMPERATURE	**-40°F~+113°F (-40°C~+45°C)**

Photocell

IP RATING	**IP65**
LIGHT-CONTROL	**10-20lux On /30-80lux Off**
TEMPERATURE	**-40°F~+113°F (-40°C~+45°C)**

© ERALUX Inc. All rights reserved. Information is subject to change without notice. All values are typical values measured under normal laboratory conditions.

Photometric Data

OD-LK-CA-100-8TCP-X-XX-T2

T2 · CLEAR LENS

Wattage	102.2W
CCT	3000K
Distribution	T2
Lens	Clear

ZONE	LUMENS	% FIXTURE
0-20°	1440.45	11.77
0-30°	3178.53	25.97
0-40°	5385.40	44.00
0-60°	10039.34	82.02
0-80°	12187.95	99.57
0-90°	12240.37	100.00

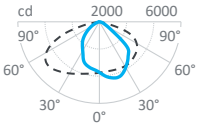

DISTANCE	CENTER Fc	BEAM WIDTH	
2.5ft	595	4.6ft	13.3ft
5.0ft	149	9.3ft	26.7ft
7.5ft	66.1	13.9ft	40.0ft
10.0ft	37.2	18.6ft	53.4ft
12.5ft	23.8	23.2ft	66.7ft
15.0ft	16.5	27.9ft	80.0ft
Vert. spread			85.8°
Horiz. spread			138.9°

OD-LK-CA-100-8TCP-X-XX-T3

T3 · CLEAR LENS

Wattage	101.7W
CCT	3000K
Distribution	T3
Lens	Clear

ZONE	LUMENS	% FIXTURE
0-20°	1224.09	10.10
0-30°	2914.61	24.05
0-40°	5315.93	43.86
0-60°	9707.84	80.10
0-80°	12046.35	99.39
0-90°	12120.30	100.00

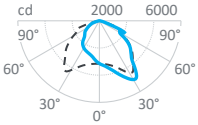

DISTANCE	CENTER Fc	BEAM WIDTH	
2.5ft	502	3.6ft	8.0ft
5.0ft	126	7.2ft	15.9ft
7.5ft	55.8	10.8ft	23.9ft
10.0ft	31.4	14.4ft	31.8ft
12.5ft	20.1	18.0ft	39.8ft
15.0ft	14.0	21.7ft	47.7ft
Vert. spread			71.6°
Horiz. spread			115.7°

OD-LK-CA-100-8TCP-X-XX-T5

T5 · CLEAR LENS

Wattage	99.7W
CCT	3000K
Distribution	T5
Lens	Clear

ZONE	LUMENS	% FIXTURE
0-20°	638.92	5.24
0-30°	1563.76	12.83
0-40°	3055.51	25.08
0-60°	7969.68	65.41
0-80°	12083.78	99.18
0-90°	12183.61	100.00

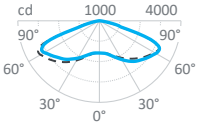

DISTANCE	CENTER Fc	BEAM WIDTH	
2.5ft	253	3.0ft	5.5ft
5.0ft	63.2	6.0ft	11.1ft
7.5ft	28.1	9.0ft	16.6ft
10.0ft	15.8	12.0ft	22.2ft
12.5ft	10.1	15.0ft	27.7ft
15.0ft	7.02	18.0ft	33.3ft
Vert. spread			62.0°
Horiz. spread			96.0°

OD-LK-CA-100-8TCP-X-FR-XX-T2

T2 · FROSTED LENS

Wattage	103.7W
CCT	3000K
Distribution	T2
Lens	Frosted

ZONE	LUMENS	% FIXTURE
0-20°	1502.25	12.91
0-30°	3265.14	28.06
0-40°	5442.64	46.77
0-60°	9587.79	82.39
0-80°	11515.22	98.95
0-90°	11637.74	100.00

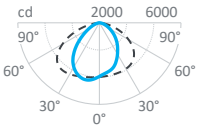

DISTANCE	CENTER Fc	BEAM WIDTH	
2.5ft	633	4.6ft	10.2ft
5.0ft	158	9.2ft	20.4ft
7.5ft	70.3	13.8ft	30.6ft
10.0ft	39.6	18.4ft	40.8ft
12.5ft	25.3	23.0ft	51.0ft
15.0ft	17.6	27.6ft	61.2ft
Vert. spread			85.2°
Horiz. spread			127.8°

© ERALUX Inc. All rights reserved. Information is subject to change without notice. All values are typical values measured under normal laboratory conditions.

Photometric Data

OD-LK-CA-100-8TCP-X-FR-XX-T3

T3 · FROSTED LENS

Wattage	**102.7W**
CCT	**3000K**
Distribution	**T3**
Lens	**Frosted**

ZONE	LUMENS	% FIXTURE
0-20°	**1176.31**	**10.50**
0-30°	**2754.73**	**24.59**
0-40°	**4937.26**	**44.08**
0-60°	**9117.96**	**81.40**
0-80°	**11069.14**	**98.82**
0-90°	**11201.56**	**100.00**

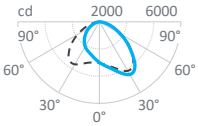

DISTANCE	CENTER Fc	BEAM WIDTH	
2.5ft	**480**	**4.2ft**	**7.2ft**
5.0ft	**120**	**8.4ft**	**14.5ft**
7.5ft	**53.3**	**12.6ft**	**21.7ft**
10.0ft	**30.0**	**16.8ft**	**28.9ft**
12.5ft	**19.2**	**21.0ft**	**36.2ft**
15.0ft	**13.3**	**25.2ft**	**43.4ft**
Vert. spread			**80.0°**
Horiz. spread			**110.7°**

OD-LK-CA-100-8TCP-X-FR-XX-T5

T5 · FROSTED LENS

Wattage	**102.8W**
CCT	**3000K**
Distribution	**T5**
Lens	**Frosted**

ZONE	LUMENS	% FIXTURE
0-20°	**798.63**	**7.57**
0-30°	**1860.91**	**17.63**
0-40°	**3425.09**	**32.45**
0-60°	**7605.77**	**72.05**
0-80°	**10355.29**	**98.10**
0-90°	**10555.75**	**100.00**

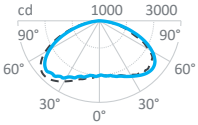

DISTANCE	CENTER Fc	BEAM WIDTH	
2.5ft	**322**	**13.9ft**	**8.9ft**
5.0ft	**80.6**	**27.8ft**	**17.7ft**
7.5ft	**35.8**	**41.7ft**	**26.6ft**
10.0ft	**20.1**	**55.6ft**	**35.4ft**
12.5ft	**12.9**	**69.6ft**	**44.3ft**
15.0ft	**8.95**	**83.5ft**	**53.1ft**
Vert. spread			**140.5°**
Horiz. spread			**121.1°**

DLC Qualified Models

Design Lights Consortium® (DLC) qualified product. Not all versions of this product may be DLC qualified. Please check the DLC Qualified Products List at www.designlights.org/QPL to confirm which versions are qualified.

DLC	PRODUCT ID	MODEL NUMBER	CATEGORY	CLASS
5.1	**S-9QKNV5**	**OD-LK-CA-100-8TCP-XX-YY-ZZ-AA**	**Outdoor**	**Premium**

© ERALUX Inc. All rights reserved. Information is subject to change without notice. All values are typical values measured under normal laboratory conditions.