OUTDOOR LED LIGHT

SPLINTER TURTLE SAFE

Project Information

Type: Date:

Project:

Catalog #:

Notes:

Wildlife-friendly light for beachfronts, walkways and gardens. This Turtle Safe amber bollard's innovative optics keep the beam shielded from the eye, set in SPLINTER's distinctive "smiley face" design.

Beachfront · Walkway · Pathway · Garden

Key Specifications

Operating & electrical

Input voltage	**120-277V**
Power factor	**>0.9**
THD	**<20%**
Dimming	**0-10V**
Power	**14W · 315lm**

Application

Ambient	**-30°C to 50°C**
Protection	**IP66, thermally-insulated driver**
Surge	**2kV L-L, 4kV L-E / 1kV L-L, 2kV L-E**
Mounting	**Concrete anchor on cast plate**
GFCI option	**In-use cover · 15A, 125V**

Mechanical & housing

Housing	**Corrosion-resistant aluminum-cast**
Lens	**Polycarbonate optical lens**
Beam angle	**Type 5**
Finish	**Thermoset powder coat**

Certifications

Listings	**ETL · RoHS · Turtle Safe**

System Warranty

5 years

Eralux will warrant defective drivers, LEDs and boards for 5 years from the date of purchase. This warranty is valid only if the fixture is installed and used as per installation guides and specifications. If a defect is present, Eralux will send drivers and boards at no fee with thorough replacement instructions along with instructions on the return of the defective parts back to Eralux.

Lumen Maintenance

L70 at 50000h

Rated for 70% initial lumen output at 50000h of operation, operated at 25°C ambient temperature; per guidelines published by the Illuminating Engineering Society (IES).

© ERALUX Inc. All rights reserved. Information is subject to change without notice. All values are typical values measured under normal laboratory conditions.

Ordering Guide - Fixture

Assembled Catalog Number

RESET

AE-OD-STT

01 FIXTURE FAMILY

AE-OD-STT

AE-OD-STT
ERALUX Outdoor products Splinter bollard fixture, Turtle Safe

02 POWER

-14UV
14W | 315lm
120-277V

03 CCT & CRI

-8TS
Amber Turtle Safe
80 CRI

04 HEIGHT

-35
35in height
6.5in diameter

05 HOUSING & FINISH

-BK
Graphite black
powder coat

06 OPTION

Blank
No option

-GC
120V GFCI
receptacle

Example: AE-OD-STT-14UV-8TS-35-BK (no option code). Aluminum-cast housing.

Accessories (ordered separately, field installed)

RESET

AE-OD-ST

01 ACCESSORY

-SIDE SHIELD-BK
Round house side shield
Reduce glare light

© ERALUX Inc. All rights reserved. Information is subject to change without notice. All values are typical values measured under normal laboratory conditions.

Dimensions

AE-OD-STT-14UV

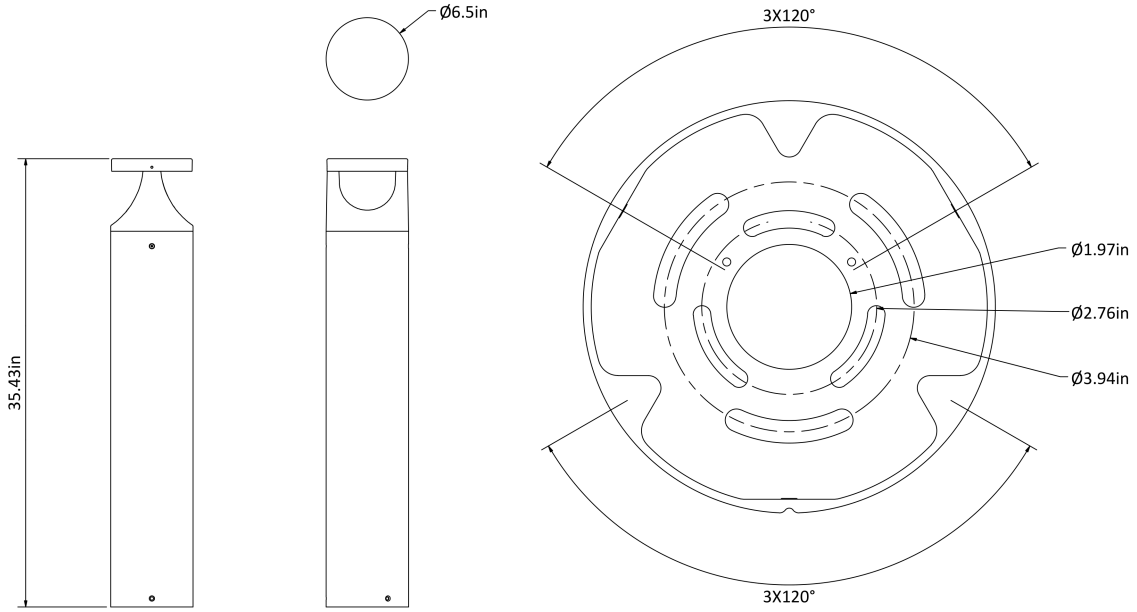

Left: fixture, side and front views, with the top view. Right: base plate. All dimensions in inches.

GFCI Receptacle

Factory installed GFCI outlet option (-GC), output voltage 120V with safety flap.
Exterior door easy locking system.
In-use cover in the side of the luminaire, 15A, 125V.

B-U-G Rating

POWER	B-U-G
14W	**B1-U0-G1**

© ERALUX Inc. All rights reserved. Information is subject to change without notice. All values are typical values measured under normal laboratory conditions.

Photometric Data

AE-OD-STT-14UV-8TS-35-BK

TURTLE SAFE · 14W

Wattage	**13.3W**
CCT	**Amber**
Distribution	**Type 5**

ZONE	LUMENS	% FIXTURE
0-20°	**0.40**	**0.08**
0-30°	**4.67**	**0.88**
0-40°	**31.68**	**5.99**
0-60°	**265.42**	**50.21**
0-80°	**522.06**	**98.76**
0-90°	**528.64**	**100.00**

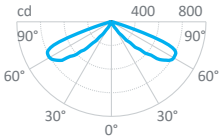

Turtle Safe Compliant

Designed to avoid and minimize lighting impact to sea turtles. It produces long wavelength above 560nm (580nm), which is amber light, minimizing the light pollution that affects sea turtle species.

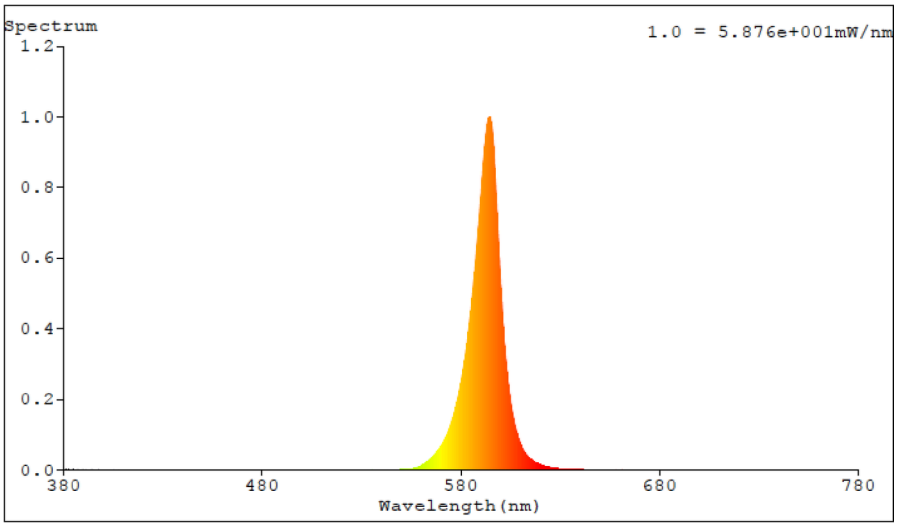

© ERALUX Inc. All rights reserved. Information is subject to change without notice. All values are typical values measured under normal laboratory conditions.